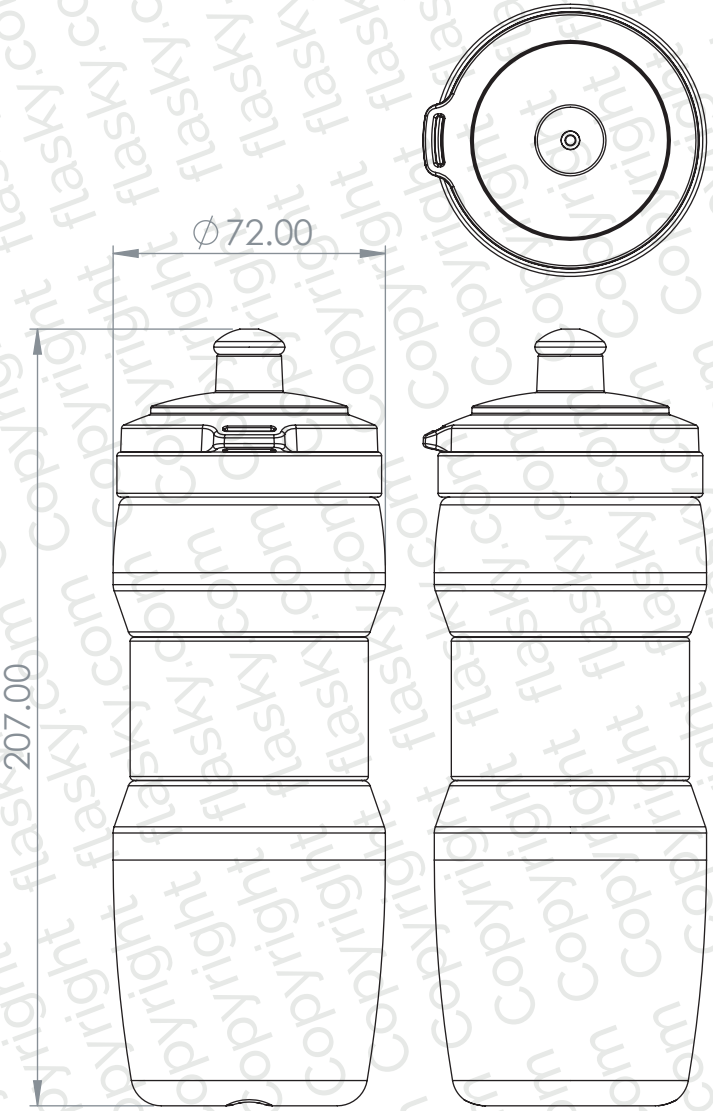

500ml / 17oz

750ml / 25oz

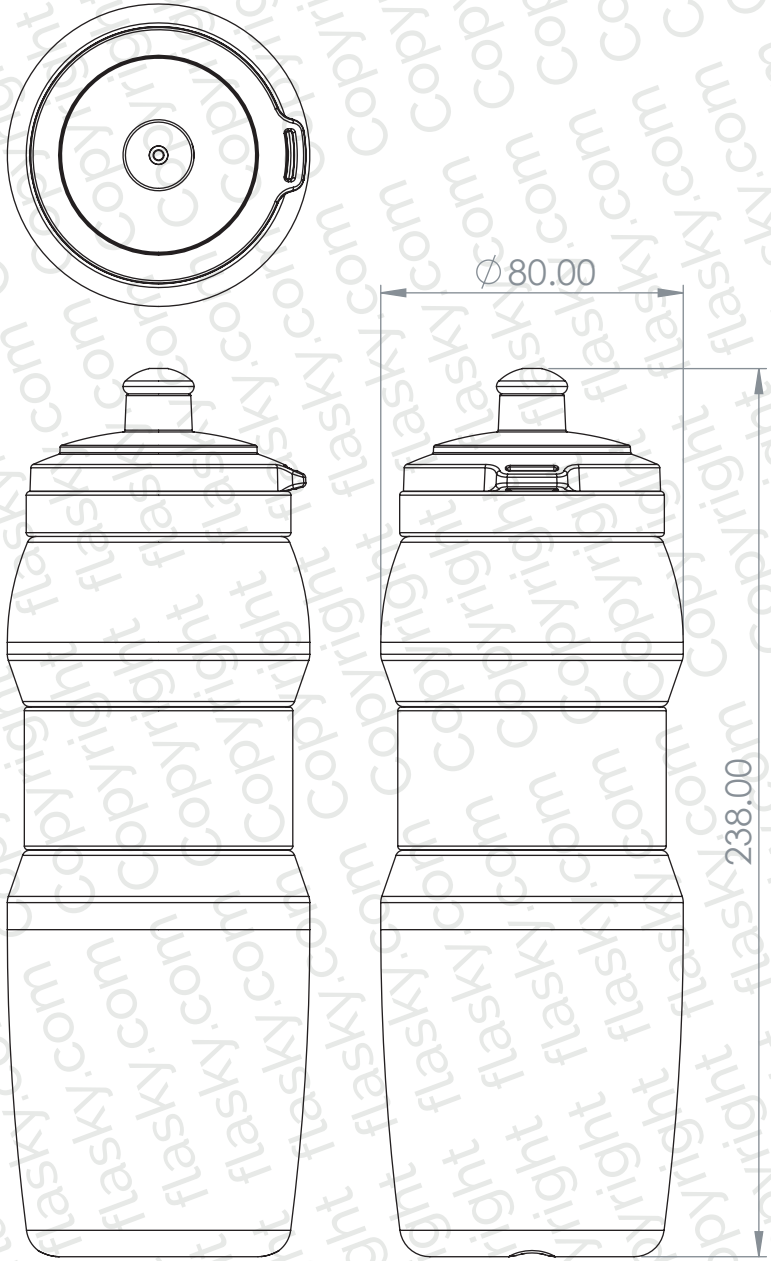

PRODUCT	CODE	DIMENSIONS	SCALE
Fit	FI	mm	1:2

flasky